STEERING AND OTAS SYSTEMS

SERVICE TOOLS

Description	Part Number	Page
DIAGNOSTIC HARNESS	529 036 188	10
FLUKE 115 MULTIMETER	529 035 868	10–11

SERVICE PRODUCTS

Description	Part Number	Page
XPS SYNTHETIC GREASE	293 550 010	5

STEERING COLUMN AND CABLE

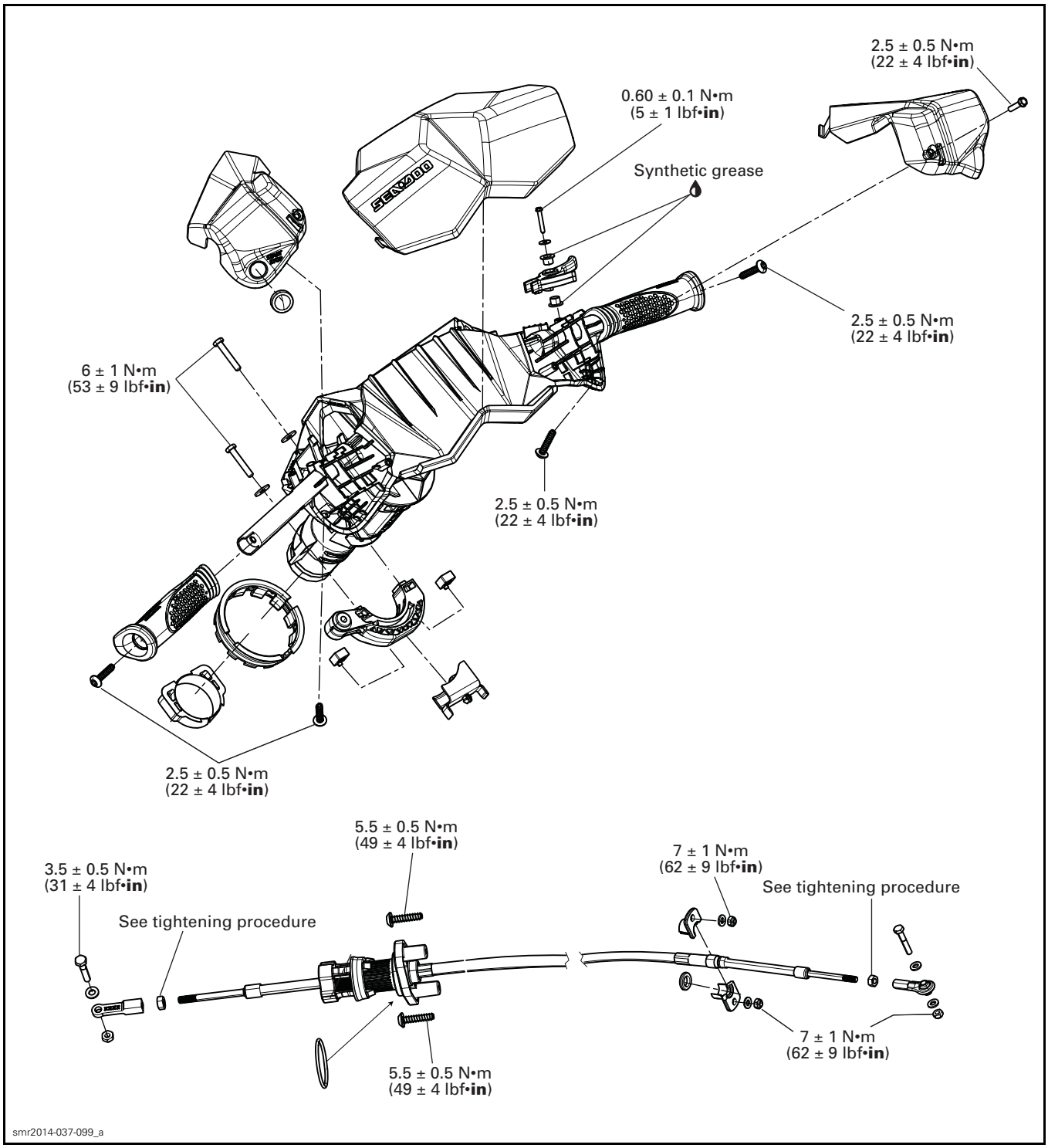

GENERAL

SYSTEM DESCRIPTION (O.T.A.S.)

The O.T.A.S. (Off-Throttle Assisted Steering) provides additional maneuverability in off-throttle situations.

The system uses a pair of magnets attached to the steering column and a Hall effect switch attached to the steering console.

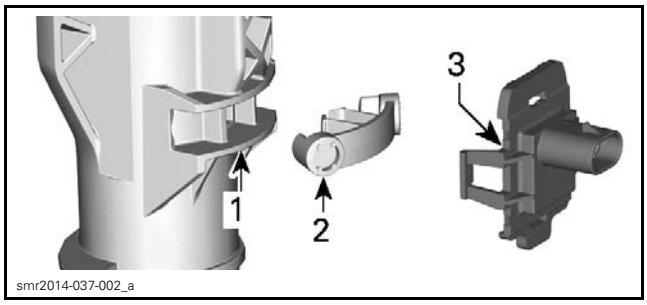

OTAS COMPONENTS
1. Steering column
2. Magnet
3. Hall effect switch

When activated by a magnet, the O.T.A.S. switch sends a signal to the ECM.

The ECM activates a pre-programmed RPM setting when the driver initiates a full turn after releasing throttle lever. The engine RPM is controlled by the Intelligent Throttle Control (iTC).

The O.T.A.S. system is activated in the following conditions:

– The engine speed must be above 4000 RPM for at least 1.5 second (approximately).
– The throttle lever must be released completely.
– The steering must be fully turned within approximately 4 seconds after throttle release.

The O.T.A.S. will stay activated for a calculated period of time as long as the O.T.A.S. switch is closed.

O.T.A.S. will be deactivated if:

– The throttle is reapplied, or
– The steering is turned sufficiently to open the O.T.A.S. switch for more than one second.

ADJUSTMENT

STEERING ALIGNMENT

1. Remove port side knee pad. Refer to *BODY*.
2. Unlock steering cable adjustment.

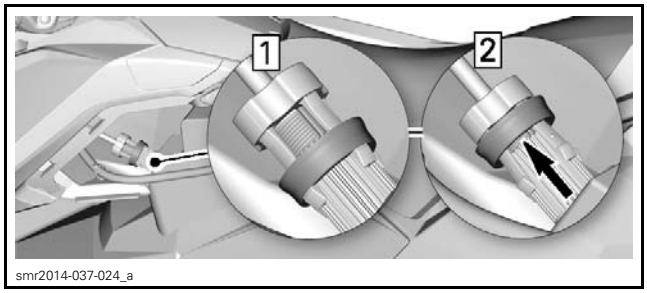

STEERING CABLE ADJUSTMENT

STEERING ALIGNMENT	
WATERCRAFT BEHAVIOR	WHAT TO DO
Pulls on left side	Turn steering cable adjustment clockwise
Pulls on right side	Turn steering cable adjustment counter clockwise

3. Lock steering cable adjustment.
4. Test watercraft.
5. Readjust as necessary.

INSPECTION

O.T.A.S. OPERATION

This test is to be performed with the watercraft in the water (test tank or on a trailer).

NOTICE **If the test is performed on a trailer, ensure no debris or rocks can damage the jet pump.**

Start engine.

Raise engine speed higher than 4000 RPM for more than 1.5 seconds.

Release throttle while steering is in the straight ahead position.

Within 3 seconds, turn handlebar all the way to one side.

The O.T.A.S. should come on by keeping or increasing engine speed to approximately 3000 RPM.

Then, engine speed will gradually decrease to idle speed within approximately 5 seconds.

Repeat test for the other side.

If the engine does not behave as described, carry out the *O.T.A.S. SWITCH TEST WITH B.U.D.S.*

TROUBLESHOOTING

DIAGNOSTIC TIPS

Check fault codes as a first troubleshooting step.

If O.T.A.S. works when handlebar is turned on one side only, check:

– Magnets condition
– If magnets and switch are securely installed.

To confirm if O.T.A.S. is functional, carry out *O.T.A.S. OPERATION* in this subsection.

PROCEDURES

HANDLEBAR GRIP

Handlebar Grip Removal

Follow image sequence.

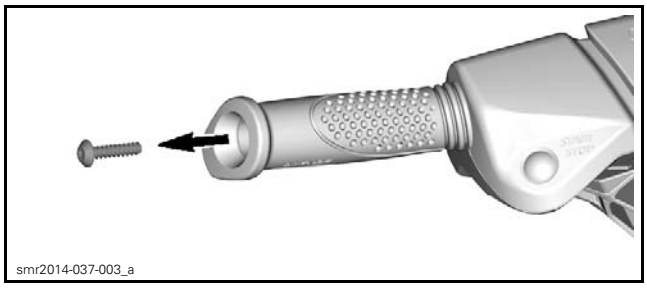
smr2014-037-003_a

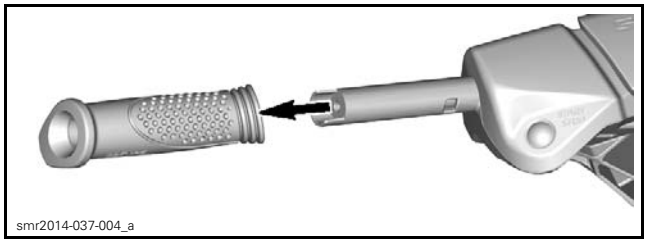
smr2014-037-004_a

NOTE: Verify grip insert for damage.

Handlebar Grip Installation

When installing the grip insert in the handlebar, ensure that it is properly inserted in the slot at the end of the handlebar tubing.

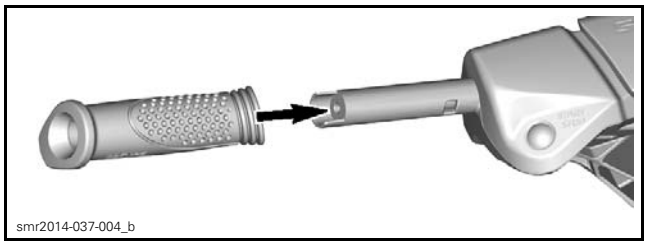
smr2014-037-004_b

Install handlebar grip on handlebar matching it to the notch in the handlebar.

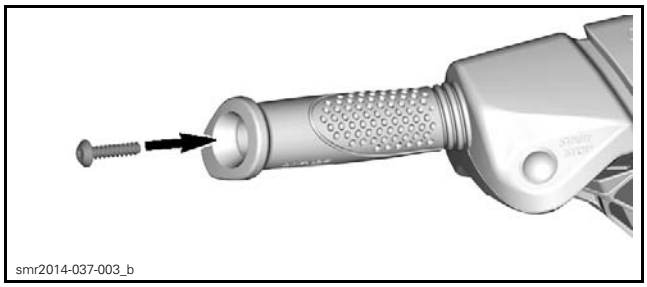
smr2014-037-003_b

HANDLEBAR SWITCH COVER (LH OR RH)

Handlebar Switch Cover Removal (LH and RH)

Follow image sequence.

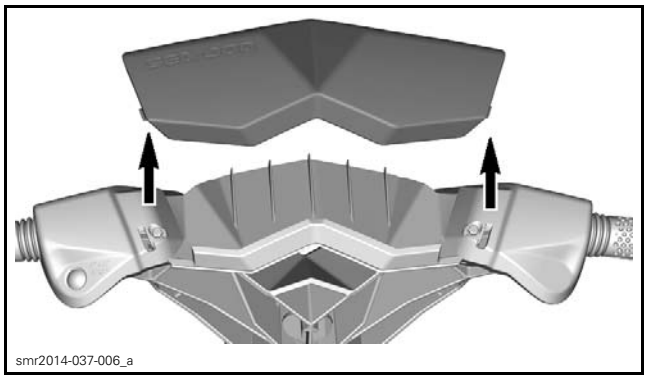
smr2014-037-006_a

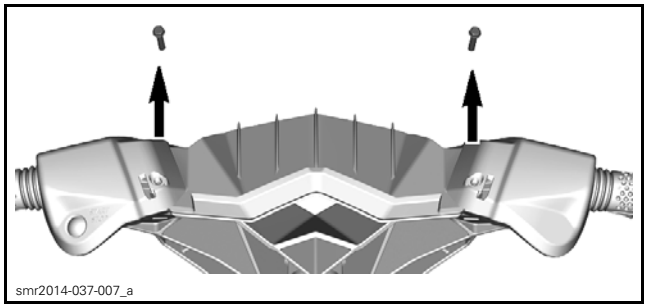
smr2014-037-007_a

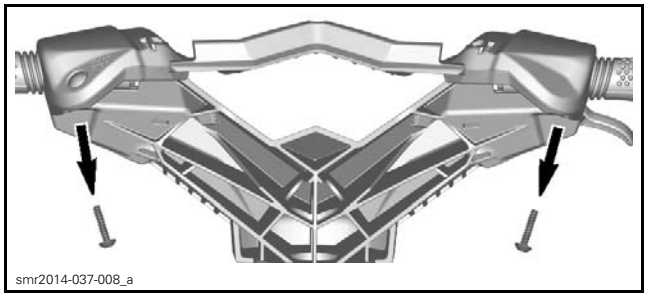
smr2014-037-008_a

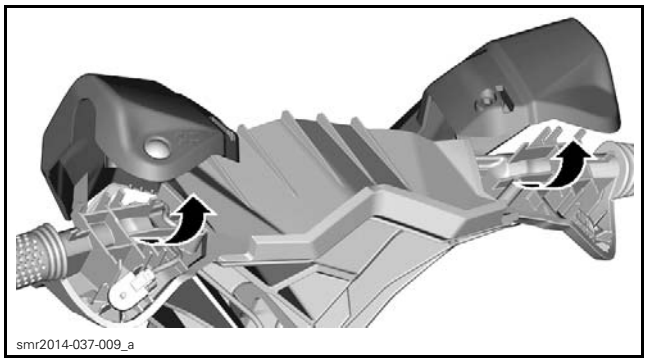
smr2014-037-009_a

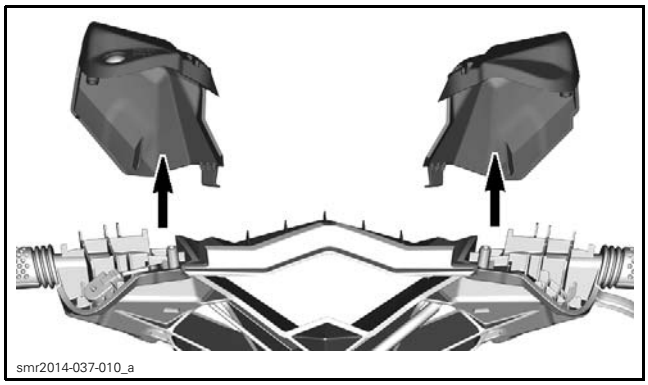
smr2014-037-010_a

Handlebar Switch Cover Installation (LH or RH)

Install start/stop switch cover on switch.

Reverse removal procedure.

THROTTLE LEVER

Lever Replacement

1. Remove *HANDLEBAR SWITCH COVER*, see procedure in this subsection.
2. Remove the screw and washer securing throttle lever.
3. Remove throttle lever and its bushings.

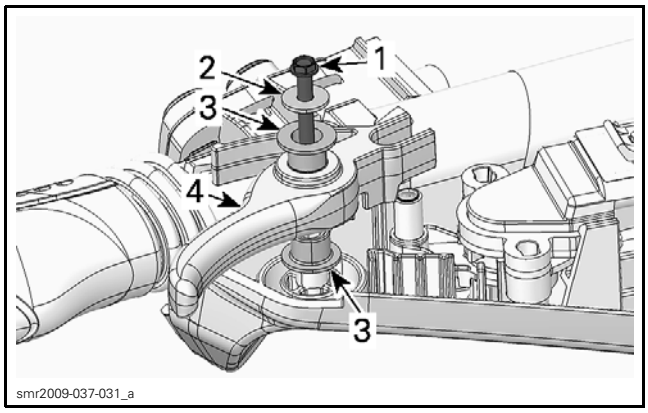

smr2009-037-031_a

1. *Retaining screw*
2. *Washer*
3. *Bushings*
4. *Throttle lever*

4. Clean throttle lever area from dust or any deposits.
5. Apply XPS SYNTHETIC GREASE (P/N 293 550 010) on bushings and on the outer surface of the return tab.

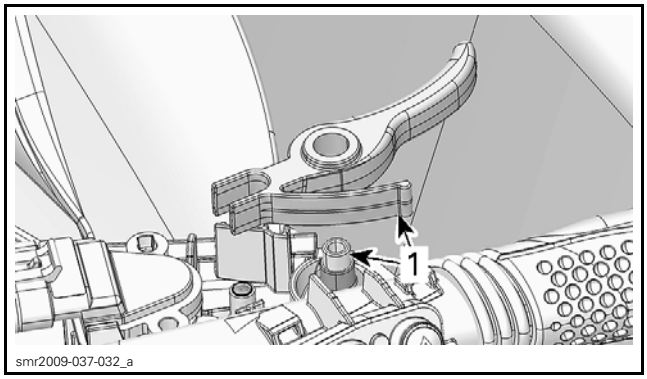

smr2009-037-032_a

1. *Apply grease here*

6. Install the lever.
   - 6.1 Install both bushings in lever hole.
   - 6.2 Insert sensor lever end into throttle lever fork.
   - 6.3 Position the return tab against the handlebar.
   - 6.4 Secure the lever with washer and screw.

STEERING CABLE

Steering Cable Removal

Remove front trim. Refer to *BODY*.

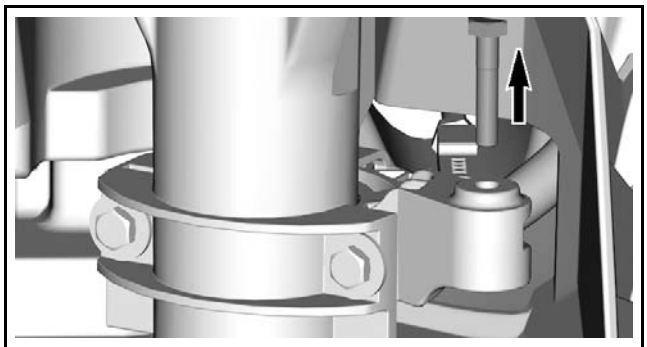
smr2014-037-021_a

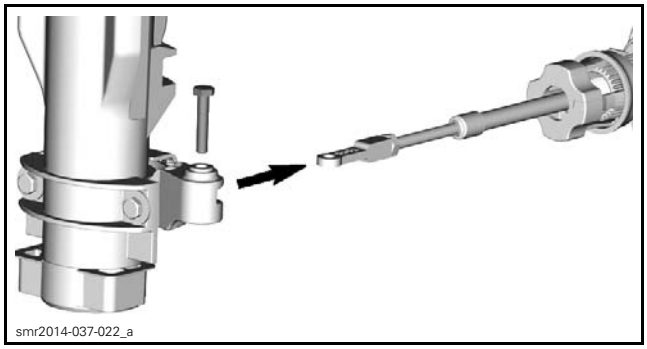
smr2014-037-022_a

Follow image sequence.

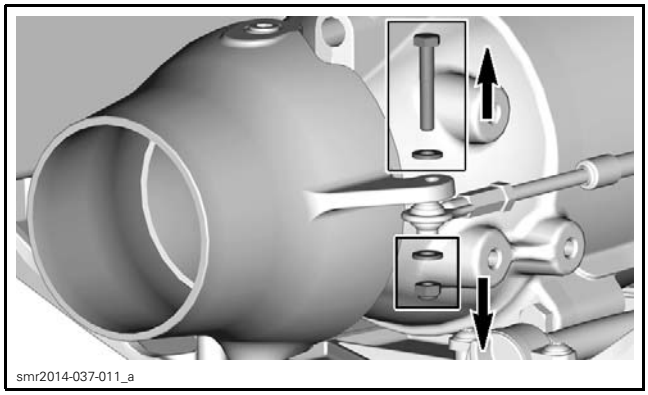
smr2014-037-011_a

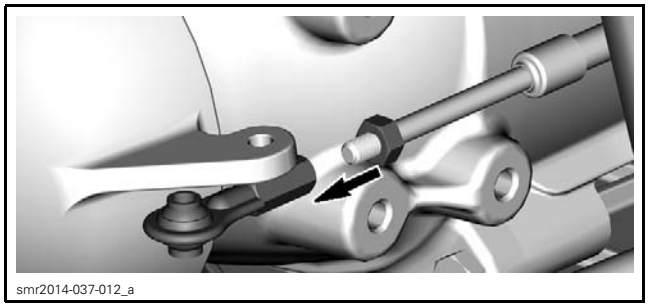
smr2014-037-012_a

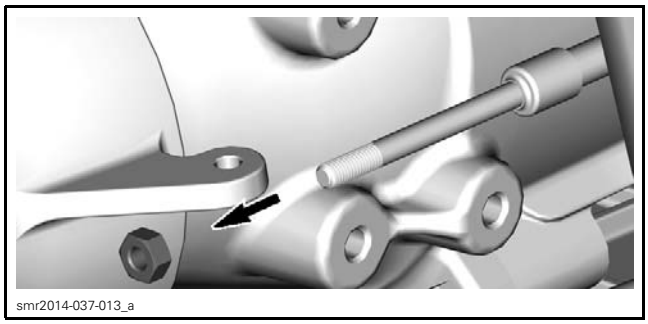
smr2014-037-013_a

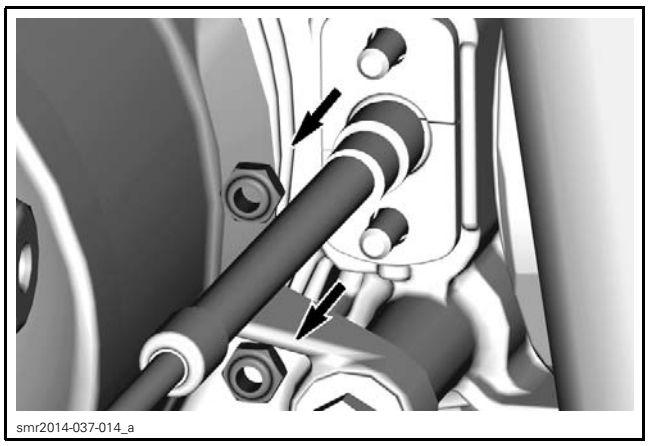
smr2014-037-014_a

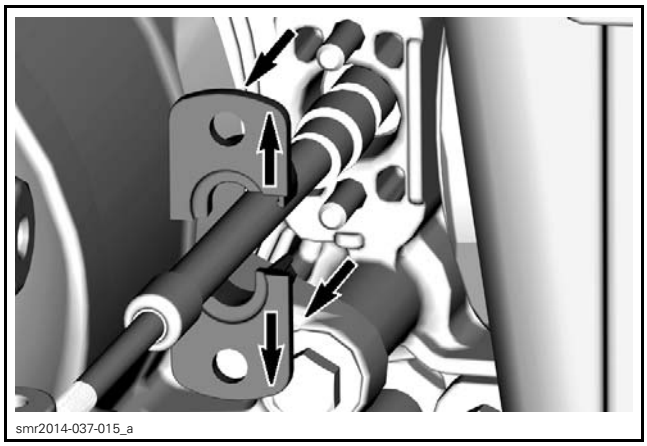
smr2014-037-015_a

Remove port side knee pad. Refer to *BODY*.

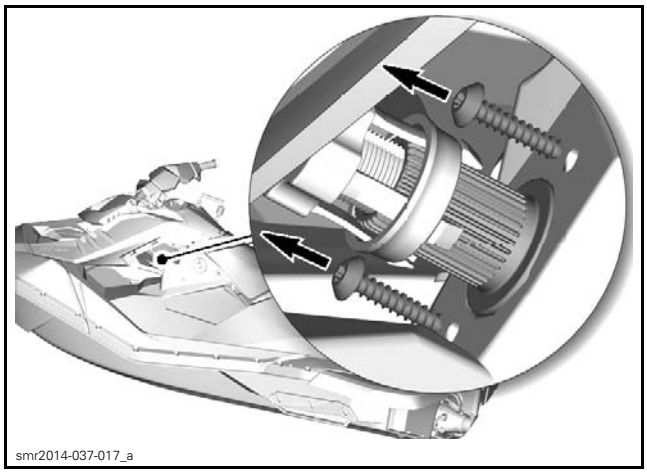
smr2014-037-017_a

Remove central body. Refer to *BODY*.

Remove steering cable.

Steering Cable End Fitting

Verify steering cable end fitting engagement.

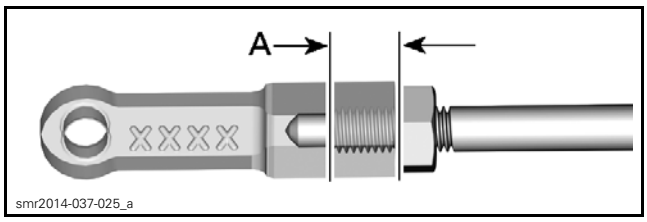

smr2014-037-025_a

STEERING CABLE END FITTING - AT STEERING COLUMN
A. Steering cable end fitting engagement 9 mm ± 1 mm (.354 in ± .039 in)

TIGHTENING TORQUE	
Steering cable end fitting jam nut	3.5 N•m ± 0.5 N•m (31 lbf•**in** ± 4 lbf•**in**)

Steering Cable Ball Joint

Verify steering cable ball joint engagement.

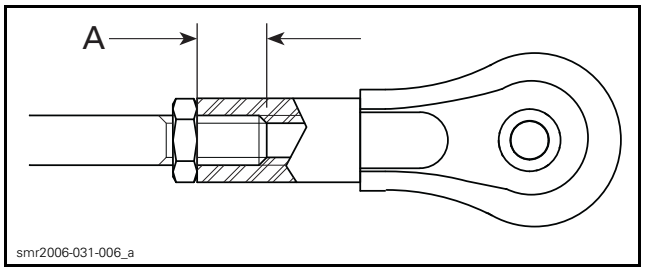

STEERING CABLE BALL JOINT - AT NOZZLE
A. Steering cable ball joint engagement 9 mm ± 1 mm (.354 in ± .039 in)

TIGHTENING TORQUE	
Steering cable ball joint jam nut	2.5 N•m ± 0.3 N•m (22 lbf•**in** ± 3 lbf•**in**)

Steering Cable Installation

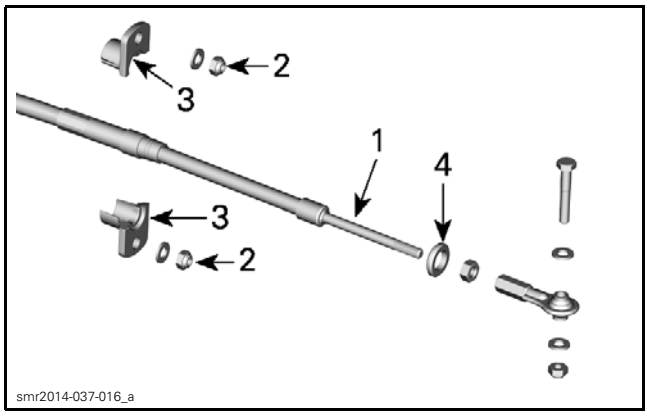

STEERING CABLE - AT JET PUMP
1. Steering cable
2. Half moon retaining nuts
3. Half moons
4. O-ring

1. Secure the steering cable to the jet pump support.
   1.1 Install O-ring and half rings.
   1.2 Secure steering cable half rings on jet pumpt support.

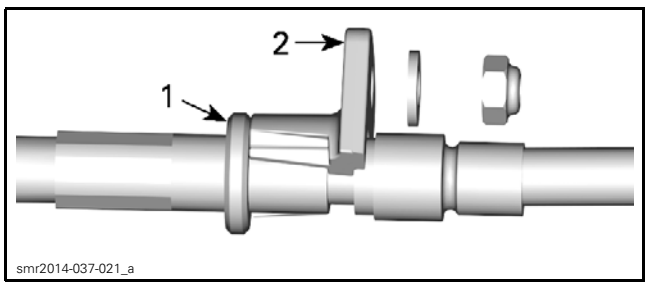

STEERING CABLE ASSEMBLY
1. O-ring
2. Half rings

2. Install the ball joint on the end of the steering cable.
   2.1 Refer to *STEERING CABLE BALL JOINT*.
   2.2 Position the steering cable ball joint to the nozzle.

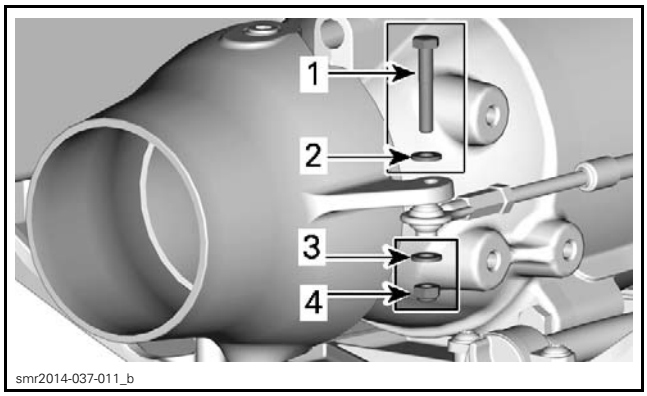

STEERING CABLE BALL JOINT
1. Ball joint bolt
2. Washer
3. Washer
4. Ball joint nut

TIGHTENING TORQUE	
Ball joint nut	7 N•m ± 1 N•m (62 lbf•**in** ± 9 lbf•**in**)

1. Carry out *STEERING CABLE ADJUSTMENT*. See procedure in this subsection.

Reverse removal procedure.

Steering Cable Adjustment

Steering cable adjustment is required only if:
- A steering cable end ball joint has been replaced or loosened/tightened.
- Steering cable adjustment nut has been loosened/tightened.
- Steering cable has been replaced.
- Steering column or support has been replaced.

1. Remove left knee pad. Refer to *BODY*.
2. Remove nut, bolt, and washer to disconnect rod from steering column.

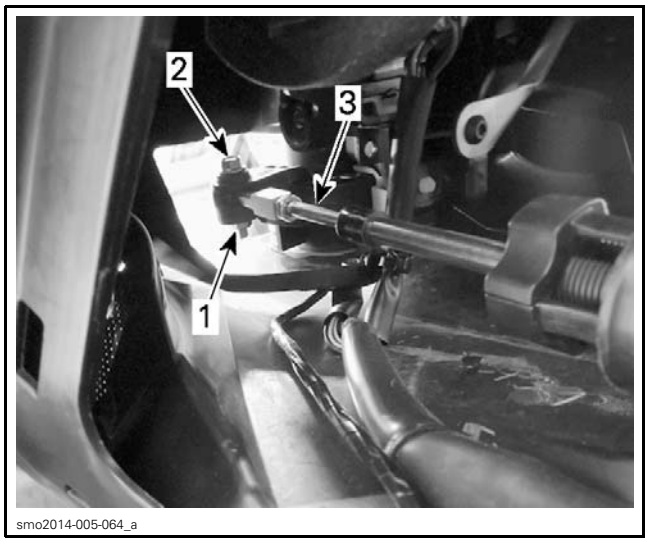

1. Nut and washer
2. Bolt
3. Rod

1. Position jet pump nozzle as follows:
   1.1 Place a straight edge on the nozzle end.

   NOTE: A spacer is necessary on the 3UP models.

   1.2 Measure the distance from the transom each side of the straight edge.

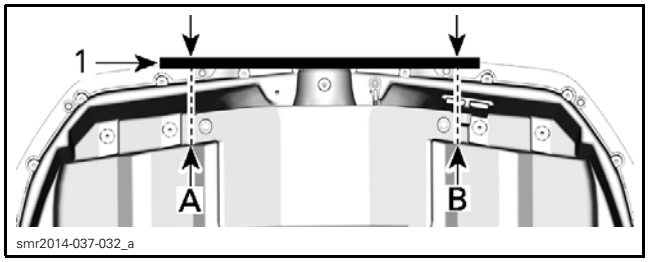

VIEW FROM UNDERNEATH THE HULL - 2UP MODELS
1. Straight edge
A. LH side measure
B. RH side measure

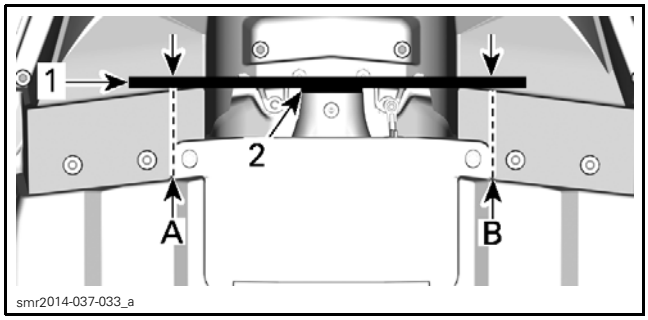

VIEW FROM UNDERNEATH THE HULL - 3UP MODELS
1. Straight edge
2. Spacer
A. LH side measure
B. RH side measure

   1.3 Turn nozzle so that measures A and B are equal.

2. Adjust steering cable as follows:

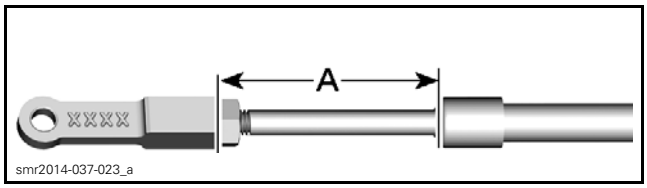

STEERING CABLE END FITTING AT STEERING COLUMN
A. Steering adjustment specification

STEERING ADJUSTMENT SPECIFICATION
55 mm ± 6 mm (2.17 in ± .24 in)
NOTE: This specification gives the proper nozzle adjustment to offset the jet pump thrust.

3. Attach steering cable end fitting to steering column.

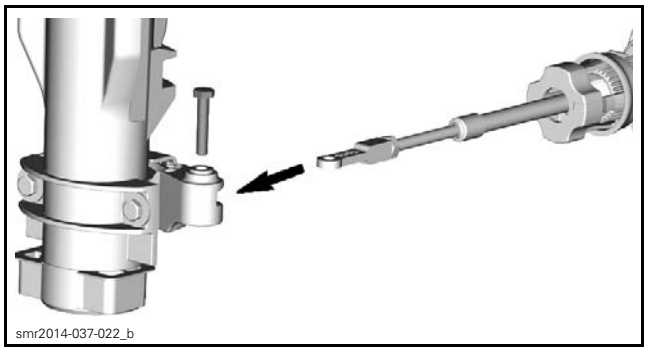

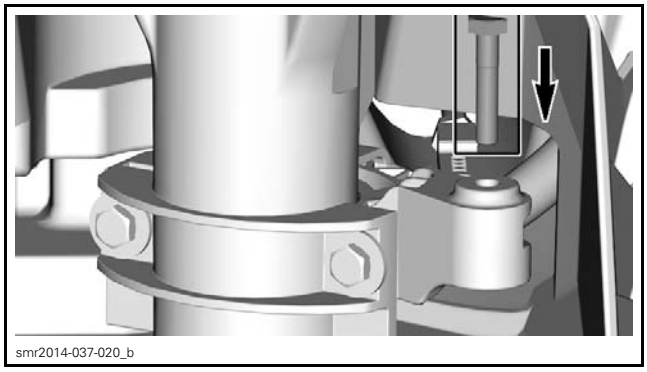

NOTE: When handlebar is in straight position and steering cable is installed, steering nozzle may not be parallel to transom. This is to offset jet pump thrust.

4. Test ride watercraft.
   4.1 If watercraft pull on one side, carry out *STEERING ALIGNMENT* in this subsection.

STEERING COLUMN

Steering Column Removal

1. Remove front trim. Refer to *BODY*.

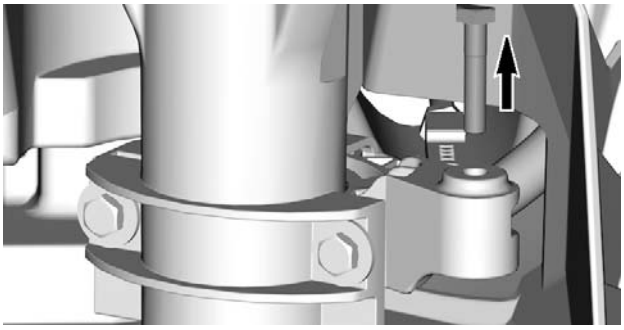
smr2014-037-021_a

2. Remove LH and RH handlebar switch covers.
3. Disconnect Start/Stop switch and drop connector into steering column.

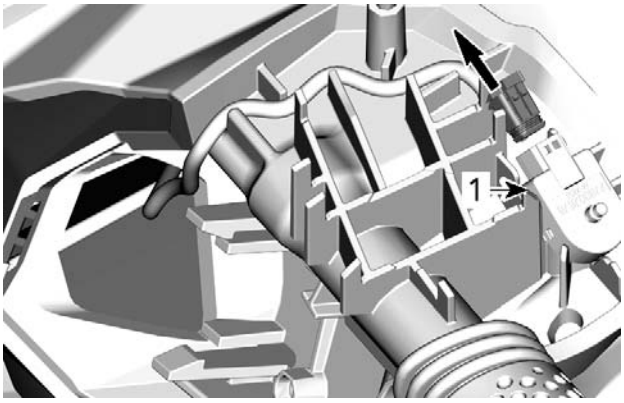

smr2014-037-018_a

LH HANDLEBAR
1. Start/Stop switch

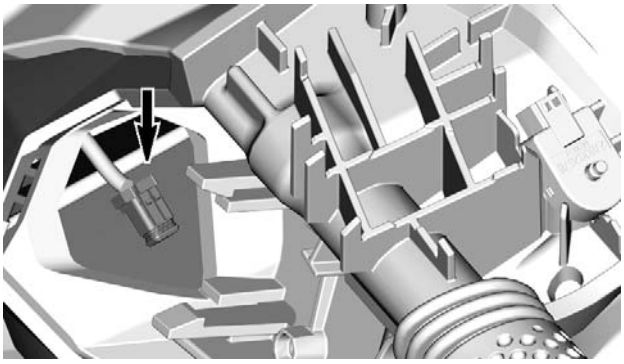
smr2014-037-019_a

LH HANDLEBAR

4. Disconnect throttle lever connector and drop connector into steering column.
5. Remove both screws securing the steering column.

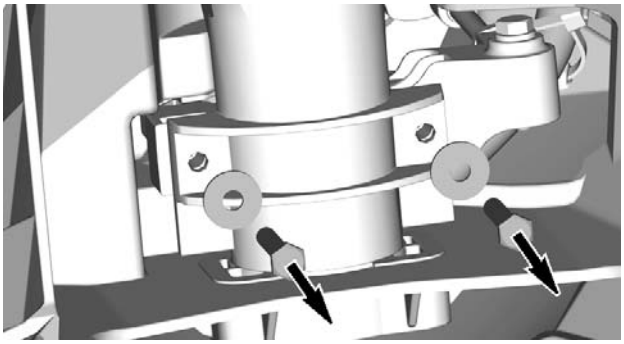
smr2014-037-026_a

STEERING COLUMN

6. Pull steering column out of its support. Ensure to not damage wiring harness connectors and O.T.A.S. magnets.

Steering Column Inspection

Check steering column for:
– Cracks
– Stress marks
– Sings of wear.

Check steering column support bushings.

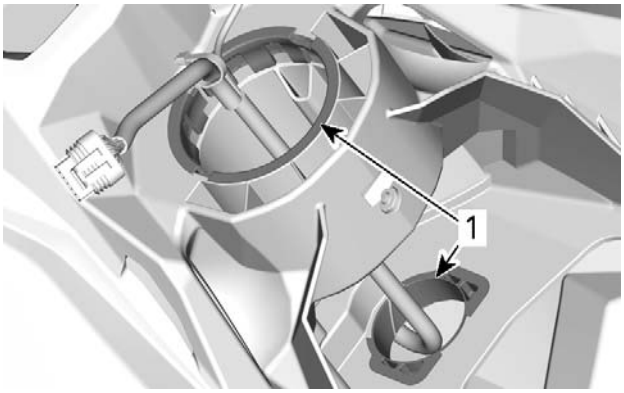

smr2014-037-027_a

CONSOLE
1. Steering column support bushings

Check wear sleeve behind the steering column arm.

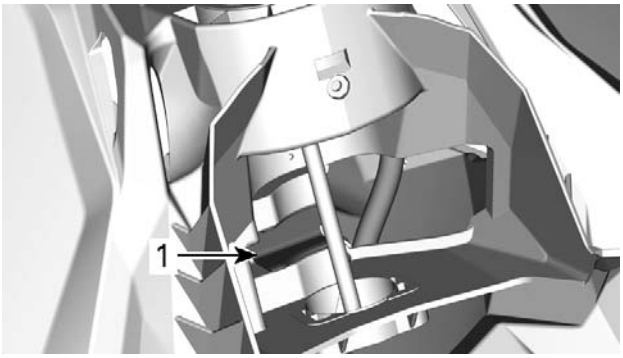

smr2014-037-028_a

1. Wear sleeve

Replace any damaged or worn parts.

Steering Column Installation

NOTICE **Ensure not to hit the O.T.A.S. magnet during steering column installation.**

Reverse removal procedure.

O.T.A.S. SWITCH

O.T.A.S. Switch Input Voltage Test

Remove port side knee pad. refer to *BODY*.

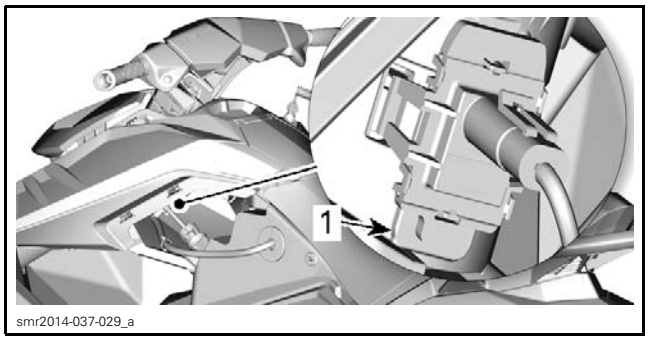

OTAS SWITCH LOCATION
1. OTAS switch

Disconnect the O.T.A.S. connector.

Connect the DIAGNOSTIC HARNESS (P/N 529 036 188) in-line between the disconnected O.T.A.S. connectors.

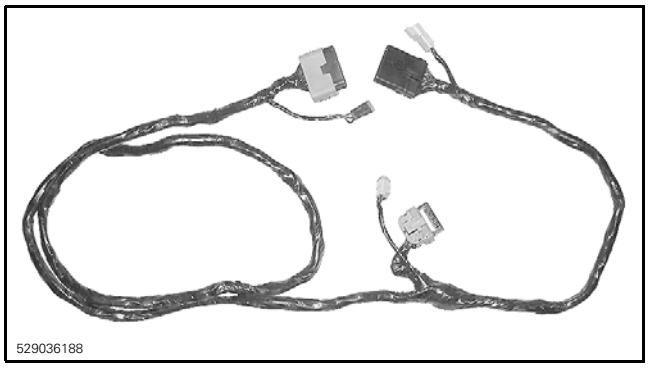

Press the START/STOP button to activate the electrical system.

Using the FLUKE 115 MULTIMETER (P/N 529 035 868), measure voltage as follows.

TEST PROBES		VOLTAGE (VDC)
PIN A (3-pin connector)	Battery negative post	Battery voltage

If voltage is not as specified, check wiring and connectors.

If voltage is as specified, carry out the *O.T.A.S. SWITCH GROUND TEST*.

O.T.A.S. Switch Ground Test

Install the DIAGNOSTIC HARNESS (P/N 529 036 188) as described in the *O.T.A.S. SWITCH INPUT VOLTAGE TEST*.

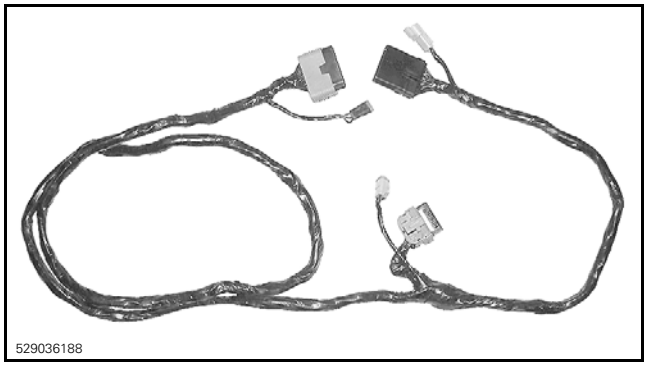

Press the START/STOP button to activate the electrical system.

Using the FLUKE 115 MULTIMETER (P/N 529 035 868), check ground circuit as follows.

TEST PROBES		VOLTAGE (VDC)
PIN A (3-pin connector)	PIN B (3-pin connector)	Battery voltage

If voltage is not as specified, check wiring and connectors.

If voltage is as specified, carry out the *O.T.A.S. SWITCH SIGNAL TEST*.

O.T.A.S. Switch Signal Test

Install the DIAGNOSTIC HARNESS (P/N 529 036 188) as described in the *O.T.A.S. SWITCH INPUT VOLTAGE TEST*.

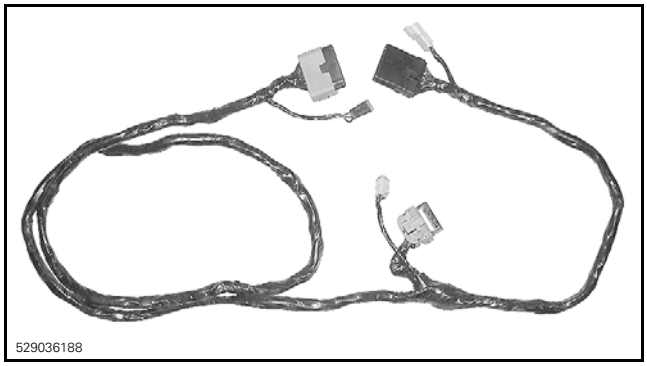

Press the START/STOP button to activate the electrical system.

Using the FLUKE 115 MULTIMETER (P/N 529 035 868), check switch signal as follows.

TEST PROBES		HANDLEBAR POSITION	VOLTAGE
PIN C (3-pin connector)	PIN B (3-pin connector)	Straight ahead	0.6 to 0.8 Vdc
		Turned completely to the right	2.0 to 2.5 Vdc
		Turned completely to the left	

If voltage is not as specified, replace the switch.

NOTE: To avoid useless switch replacement, make sure magnets are in good condition. Also, make sure magnets and switch are securely clipped.

O.T.A.S. Switch Replacement

Remove port side knee pad. refer to *BODY*.

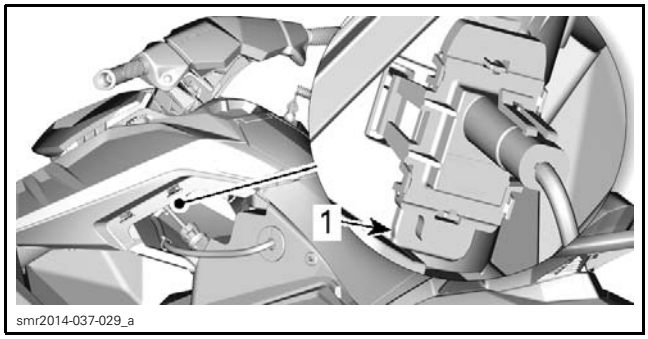

OTAS SWITCH LOCATION
1. OTAS switch

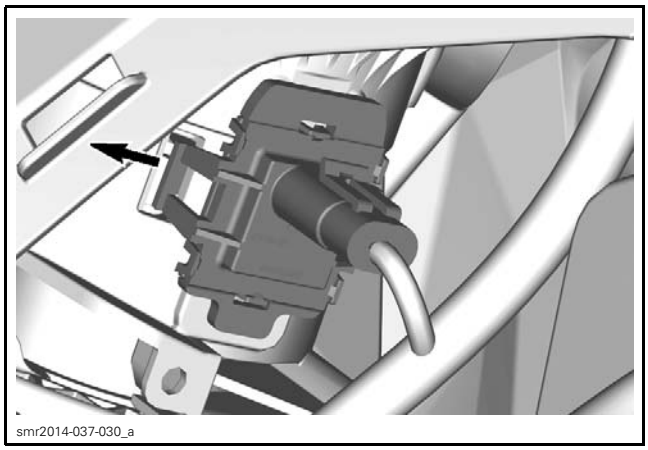

OTAS SWITCH

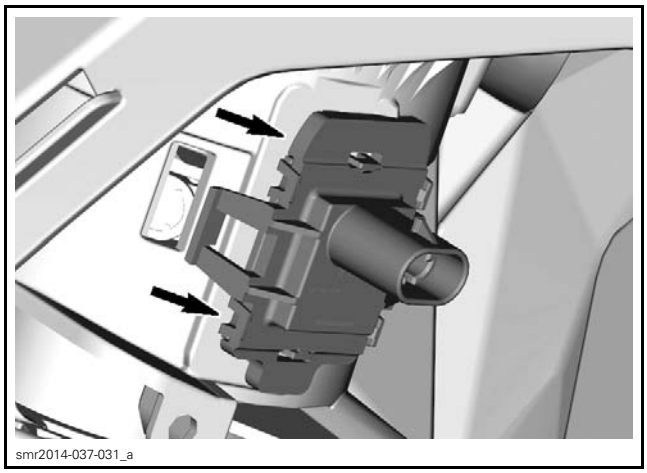

Reverse removal procedure to reinstall the O.T.A.S. switch.

O.T.A.S. MAGNETS

Magnets Replacement

1. Remove *STEERING COLUMN*, see procedure in this subsection.
2. Pull magnets off the steering column.

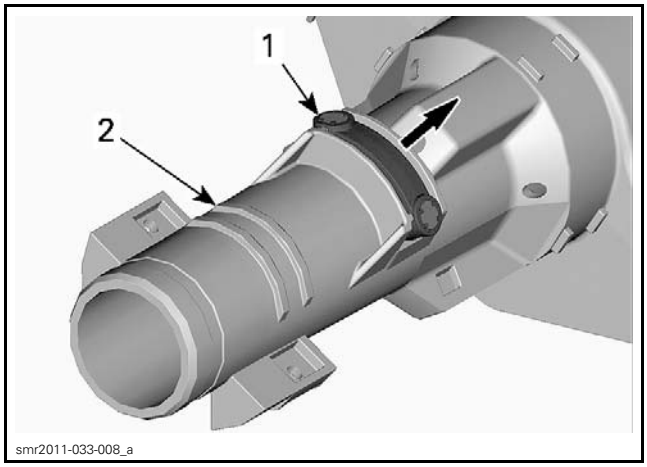

TYPICAL
1. Magnets
2. Steering column

Reverse removal procedure to reinstall the magnets.